Datasheet
Main switch
Art. No. MKCEES5-67-16A-P

Intratec Warenhandels GmbH
Gruetzmuehlenweg 46
22339 Hamburg
Germany
FON: +49 40 538092 888
FAX: +49 40 538092 930
MAIL: info@intratec-hh.de
WEB: www.intratec-shop.de

Electrical specifications
Number of poles: 5-pole (3P+N+E)
Rated voltage: 400 V (50/60 Hz)
Rated current: 16A
Protection class: IP67
Clock time setting: 6h
Operating temperature: -25° to +60°
Material: Polyamide
Basic color: red / grey
For cable sizes: 1 – 2,5 mm²
Certifications: CE, SB
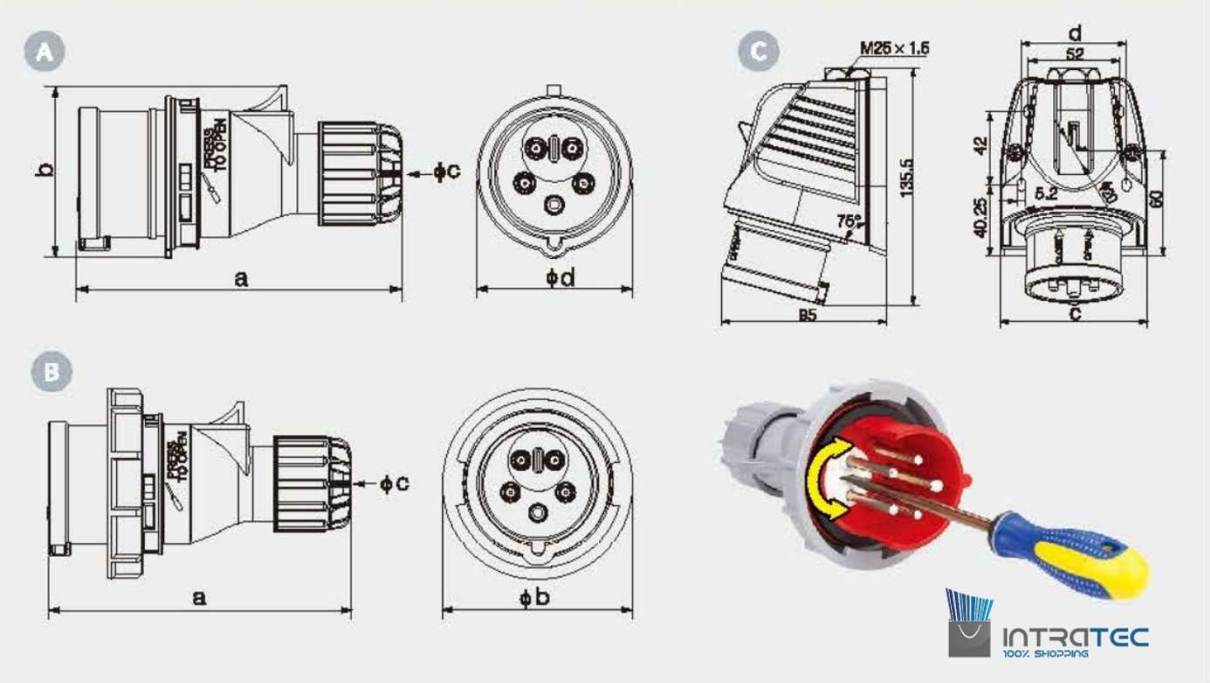
Dimensions:
A: 133 mm
B: 87 mm
C: 17 mm